Wind Borne Debris in Hurricanes

Hurricane Debris Environment

Debris Generated in Hurricane Andrew

Debris Generated in Hurricane Andrew

Figure 2-4.
Roof structure failure due to inadequate bracing and inadequate fastening of the roof deck, Hurricane Andrew (Dade County, FL, 1992)

Figure 2-5.
This elevated house atop a masonry pier foundation was lost, probably due to waves and storm surge reaching above the top of the foundation, Hurricane Katrina (Long Beach, MS, 2005)

Hurricane Debris Environment

Debris Generated in Hurricane Andrew

Small Debris
Damage
Hurricane
Andrew

Small Debris Damage Hurricane Ike

Small Debris Damage Hurricane Alicia

Wind Resistant Construction Standards in Florida Building Code

Florida Building Code 2010. Wind Speed Map for Residential Buildings

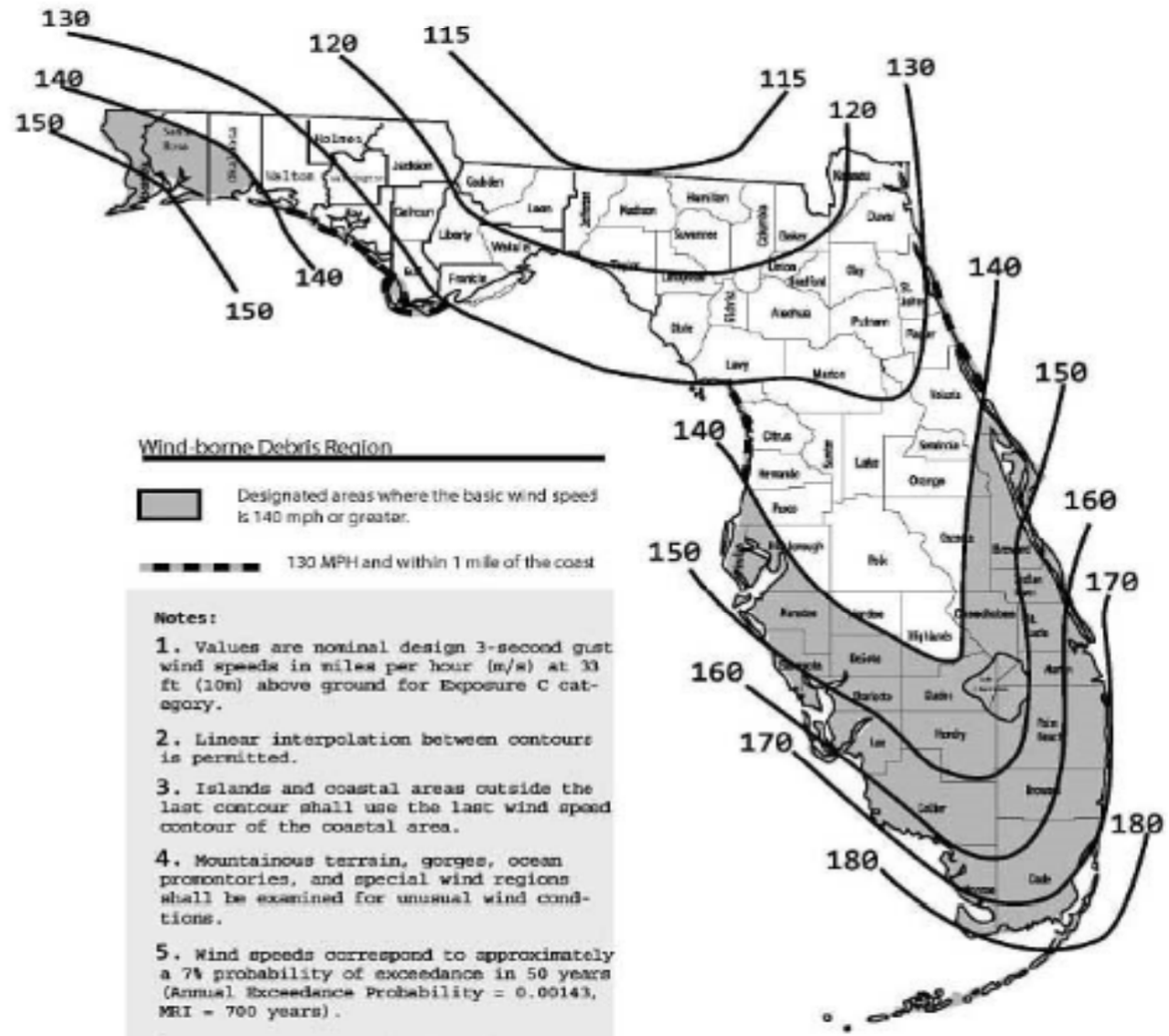

Notes:

1. Values are nominal design 3-second gust wind speeds in miles per hour (m/s) at 33 ft (10m) above ground for Exposure C category.

2. Linear interpolation between contours is permitted.

3. Islands and coastal areas outside the last contour shall use the last wind speed contour of the coastal area.

4. Mountainous terrain, gorges, ocean promontories, and special wind regions shall be examined for unusual wind conditions.

5. Wind speeds correspond to approximately a 7% probability of exceedance in 50 years (Annual Exceedance Probability = 0.00143, MRI = 700 years).

6. This map is accurate to the county. Local governments establish specific wind speed/wind-borne debris lines using physical landmarks such as major roads, canals, rivers, and shorelines.

Florida Building Code 2010. Wind Speed Map for The Longboat Key

Ultimate 3-sec gust speed contours
for residential buildings

LongBoat Key

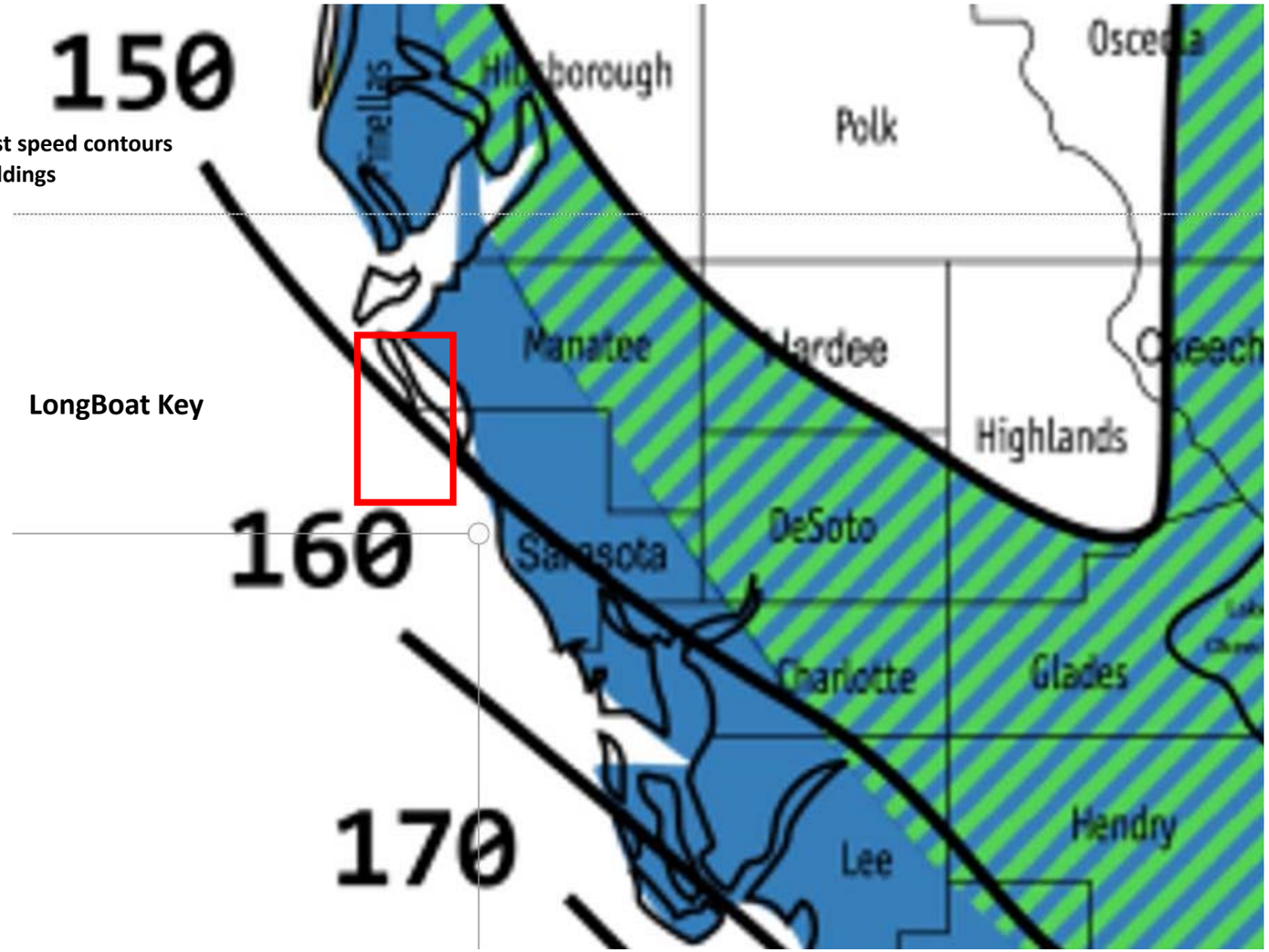

Wind Effects on Structures

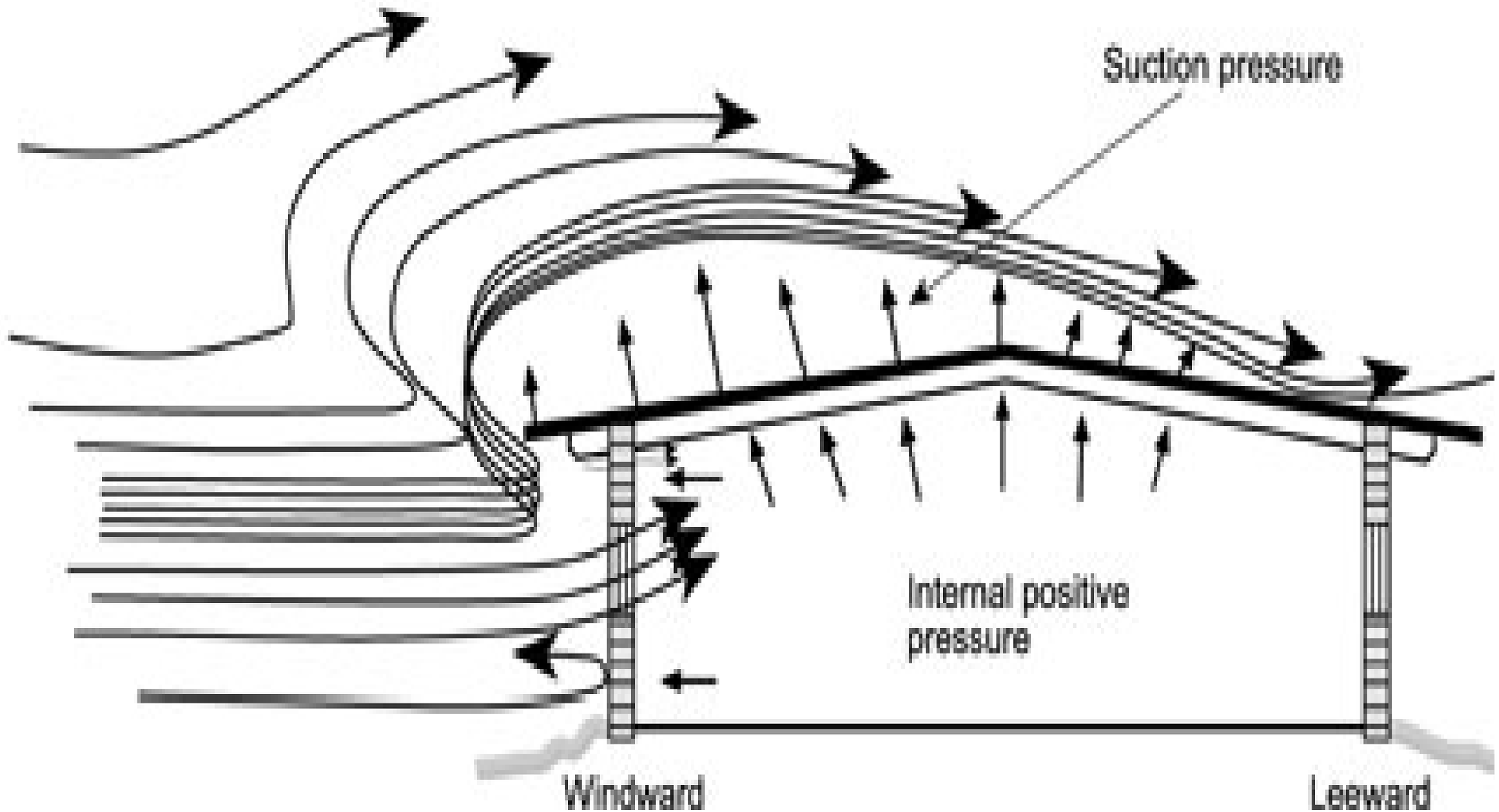

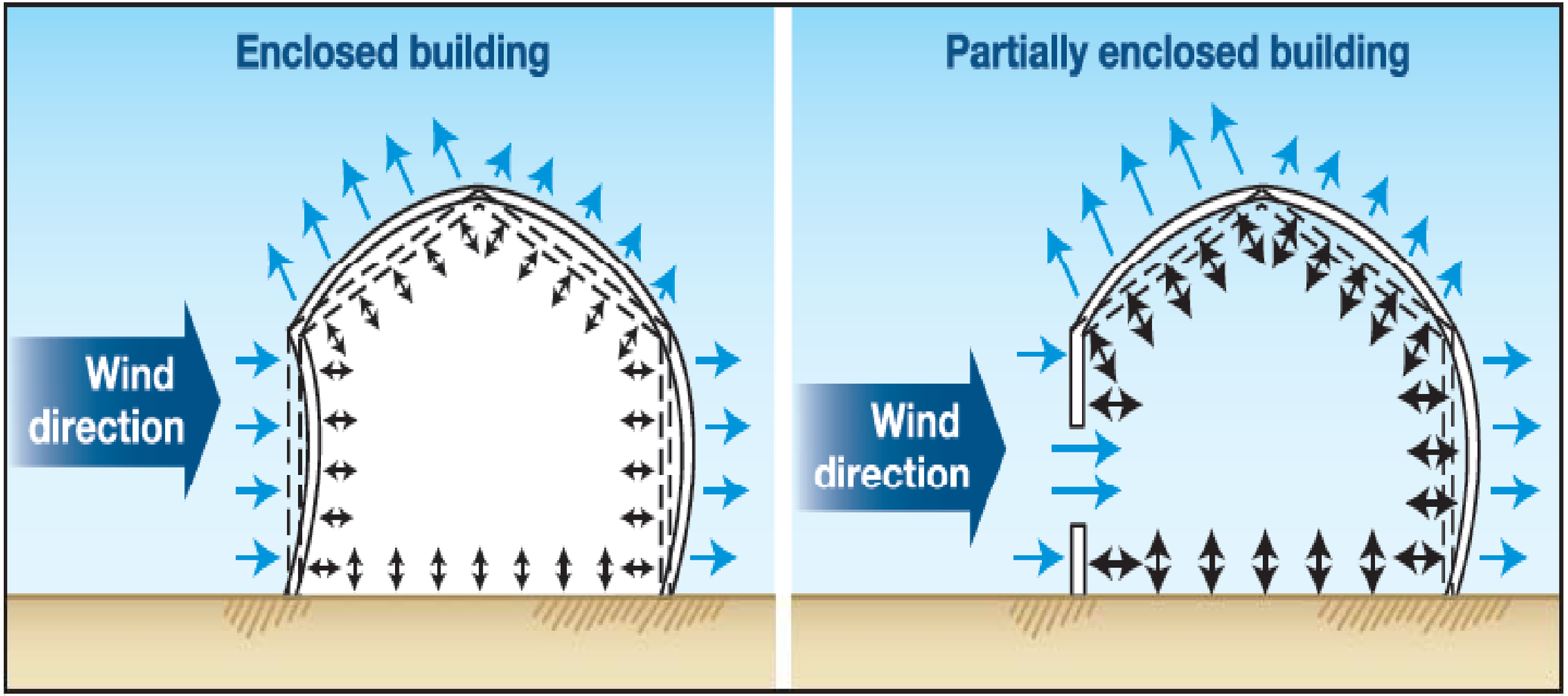

Figure 8-17.
Effect of wind on an enclosed building and a building with an opening

Wind Effects on Buildings

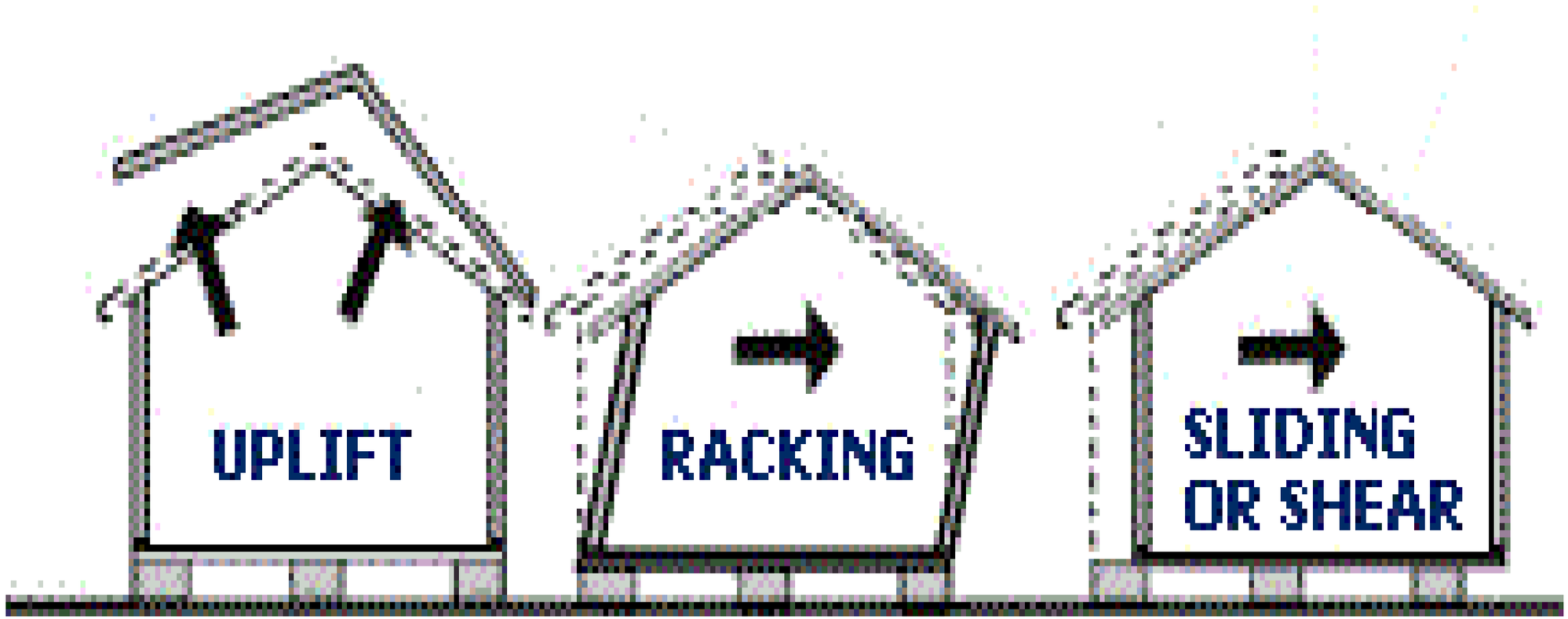

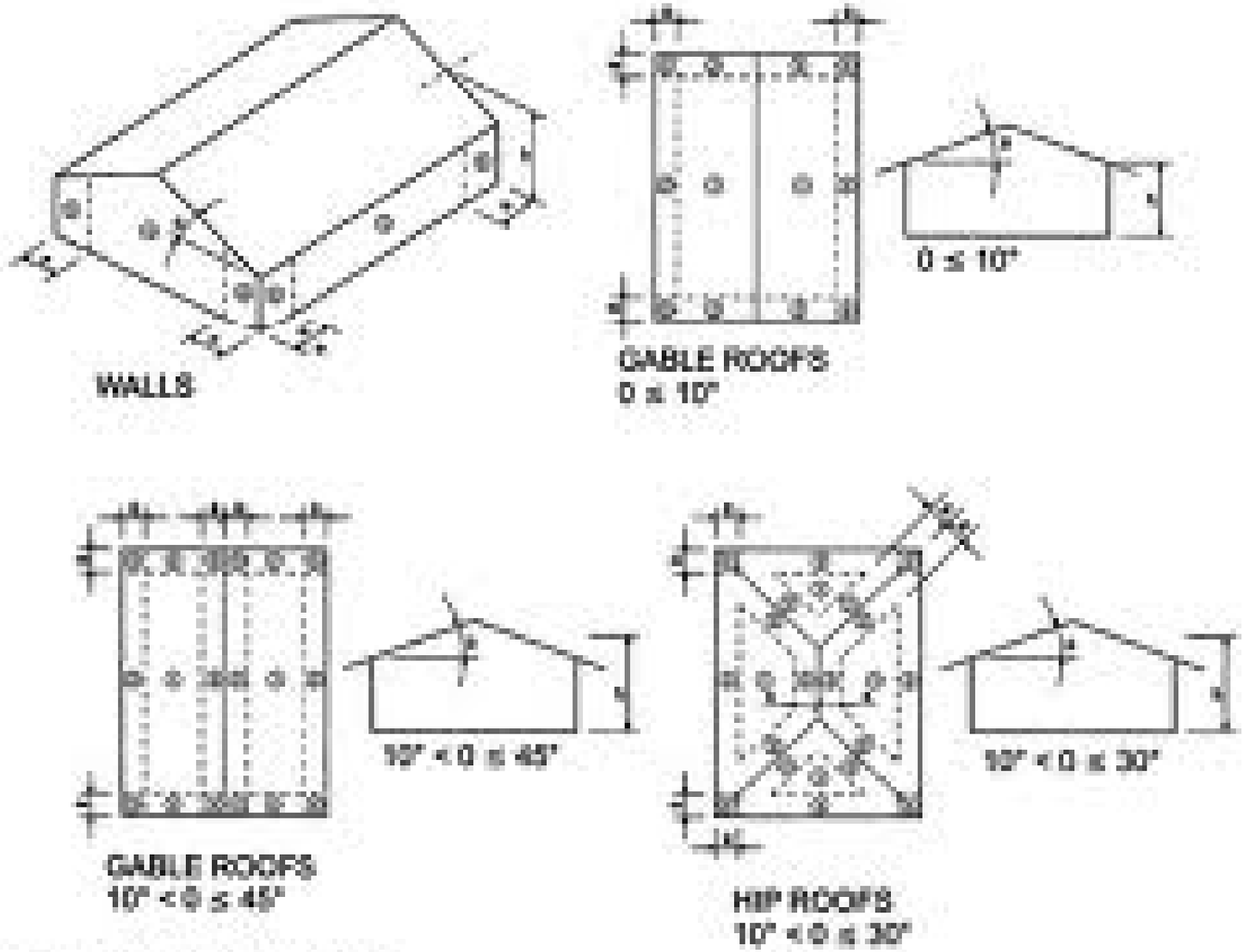

For SI: 1 foot = 304.8 mm, 1 degree = 0.0175 rad.
Note: a = 4 foot in all cases.

HURRICANE DEBRIS LOADS PHYSICS

Large Missiles:

Timbers, roof tiles, wood shakes, sheathing panels, flower pots, shingles, siding, sheet metal, bricks,

Fly or tumble near ground

Impact speed 1/3 to 1/2 of the average wind speed

Small Missiles:

Roof gravel, glass particles,

Fly at rooftop elevations

Impact speed 90% of of average wind speed

Hurricane Debris Standards
ASTM STANDARD E1886-02
(TEST METHOD)

- Large missile:4.5 - 15 lb 2x4 timber impacting between 0.10 and 0.55 of the basic wind speed (3-sec gust)

- Small missile:solid steel ball having a mass of 2 gm impacting between 0.40 and 0.75 of the basic wind speed (3-sec gust)

Debris Test Protocol

- Impact with representative missile
  - large missile (2x4 timber at 33 mph)
  - small missile (2 gm steel ball or rock)

- Apply fluctuating pressures
  - inward acting
  - outward acting

FLUCTUATING PRESSURES IN U.S. CODES AND STANDARDS

Inward Acting Pressure		Outward Acting Pressure	
Range	Number of cycles	Range	Number of cycles
$0.2P_{MAX}/0.5\ P_{MAX}$	3,500	$0.3P_{MAX}/1.0\ P_{MAX}$	50
$0.0\ P_{MAX}/0.6\ P_{MAX}$	300	$0.5\ P_{MAX}/0.8\ P_{MAX}$	1,050
$0.5\ P_{MAX}/0.8\ P_{MAX}$	600	$0.0\ P_{MAX}/0.6\ P_{MAX}$	50
$0.3\ P_{MAX}/1.0\ P_{MAX}$	100	$0.2\ P_{MAX}/0.5\ P_{MAX}$	3,350

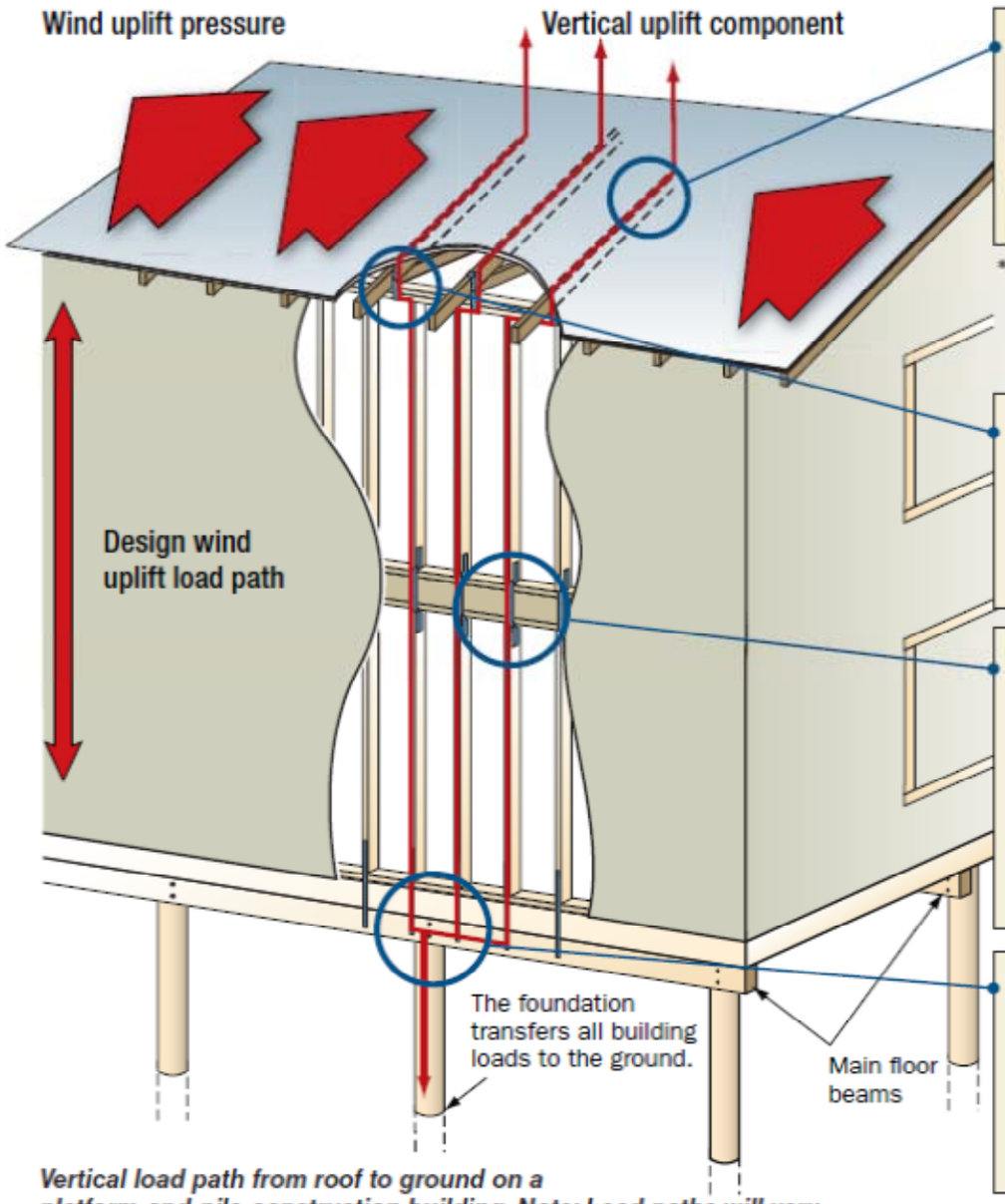

Vertical load path from roof to ground on a platform-and-pile-construction building. Note: Load paths will vary depending on construction type and design. Adjacent framing

LINK 1
High winds lift the roof upward. Roofing fasteners link the roof covering to the sheathing*, and sheathing fasteners link the sheathing to the roof framing members (see Fact Sheet No. 7.1).

* Although not a structural connection, the attachment of the roof covering to the roof sheathing is an essential part of protecting the building envelope.

LINK 2
Accumulated roof load is routed through roof-to-wall connections. Special roof ties connect the roof framing to the bearing walls (see Fact Sheet No. 4.3).

LINK 3
Upper walls transfer loads directly to the lower walls. The floor framing is bypassed by using metal straps or extended exterior sheathing that directly connects upper wall studs to the lower wall studs. A similar connection is used to connect the lower wall to the main floor beam.

LINK 4
The accumulated uplift force is transferred from the main floor beams to the pile foundation with special brackets or bolts (see Fact Sheet No. 3.3). Note: Some of this load is offset by the weight of the building.

Note: Horizontal load paths transferring shear from upper stories to the ground must also be

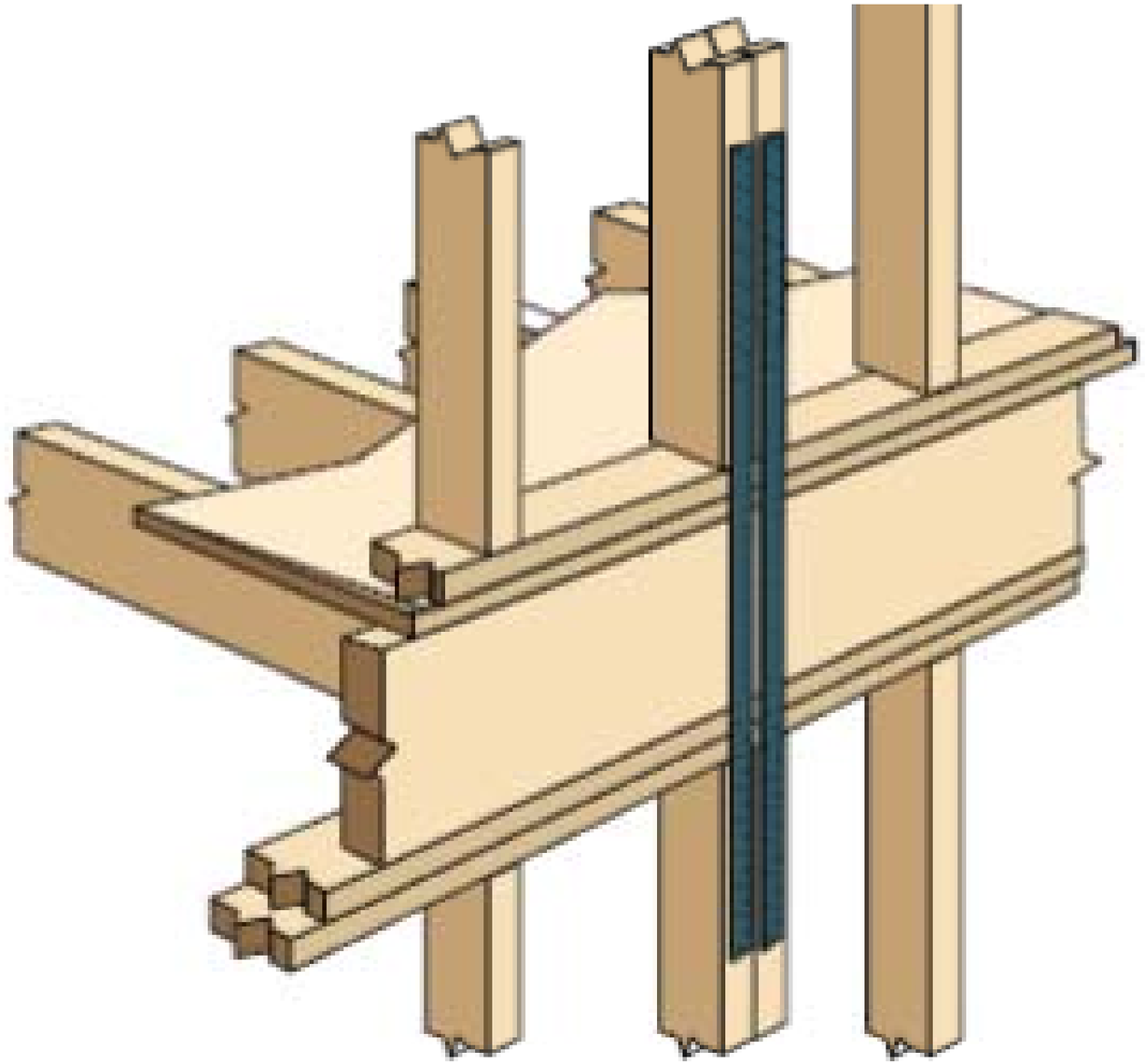

Proper strap connection.

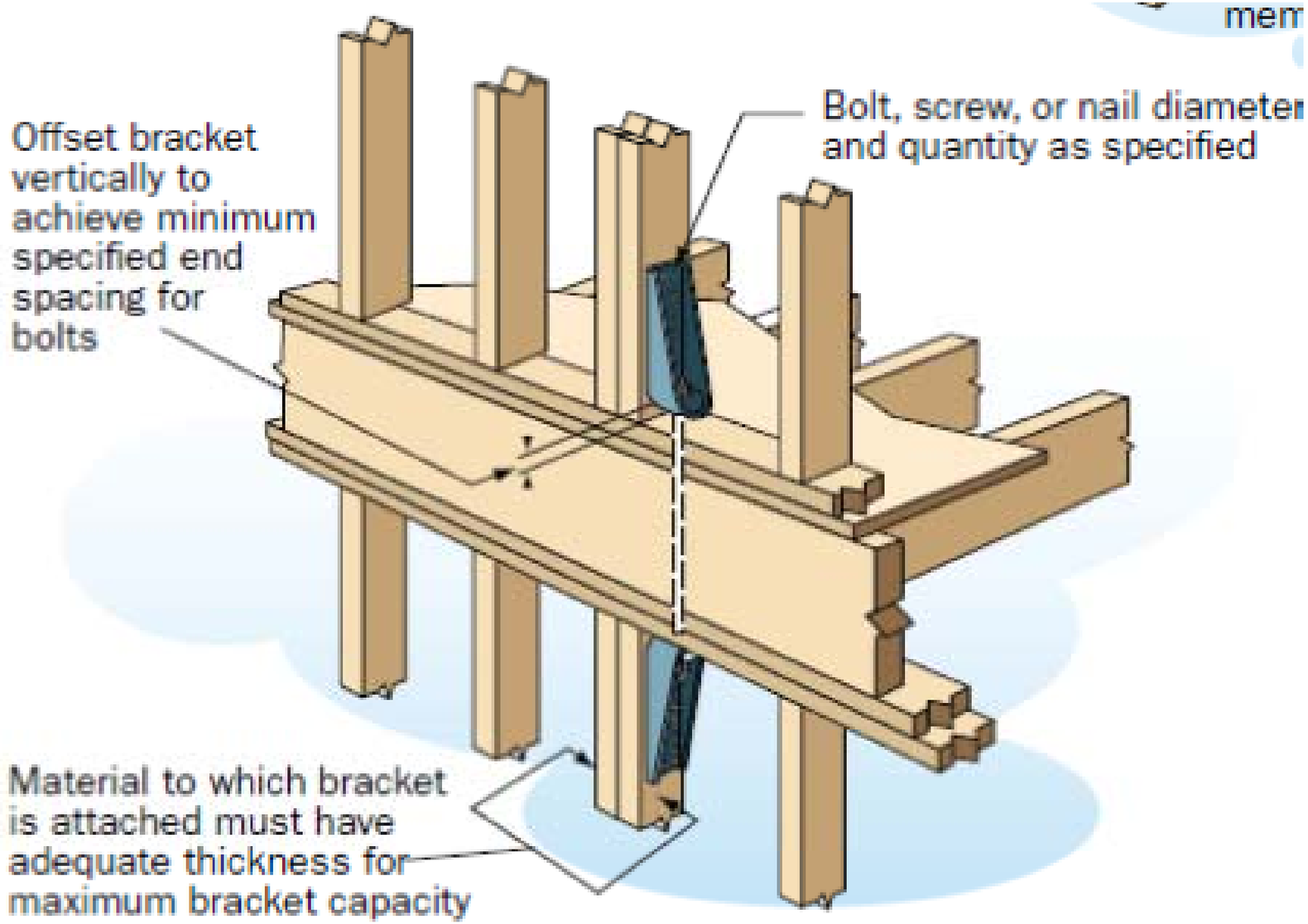

Proper bracket connection.

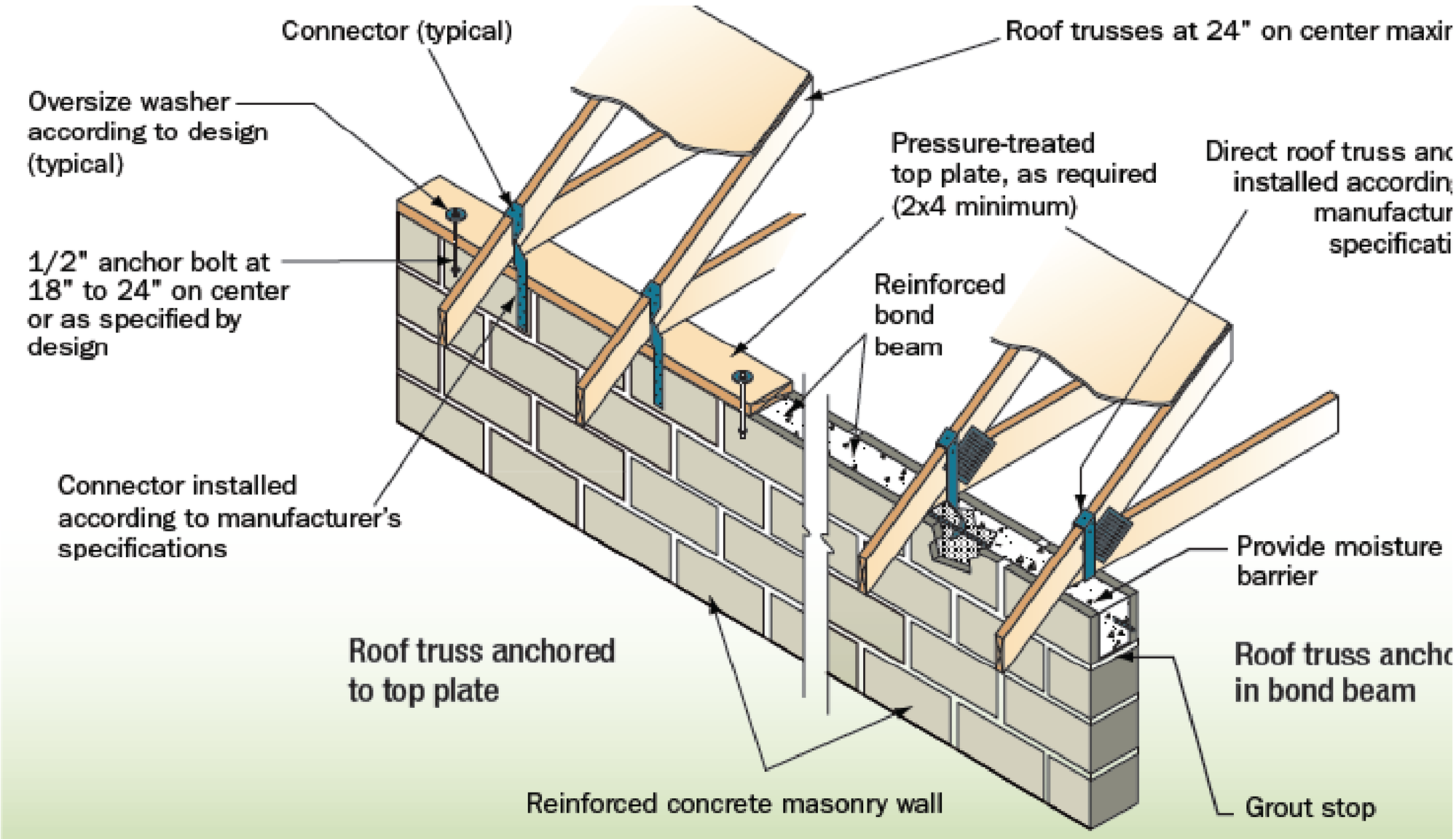
Connector (typical)
Roof trusses at 24" on center maxir
Oversize washer according to design (typical)
Pressure-treated top plate, as required (2x4 minimum)
Direct roof truss anc installed accordin manufactur specificati
1/2" anchor bolt at 18" to 24" on center or as specified by design
Reinforced bond beam
Connector installed according to manufacturer's specifications
Provide moisture barrier
Roof truss anchored to top plate
Roof truss ancho in bond beam
Reinforced concrete masonry wall
Grout stop

Corrosion Issues in Coastal Areas

Corrosion Rates Comparison, FEMA Publication

Table 1 Corrosion Rates for Carbon Steel at Various Locations

Location	Environment (macro)	Section loss (μm) 1 yr	Section loss (μm) 2 yr
Phoenix. AZ	rural	6.6	9.2
Vancouver, B.C.	rural-marine	17.3	26.7
Detroit, MI	industrial	23	28.9
Potter County, PA	rural	21.8	41.1
State College, PA	rural	25.1	45.9
Durham, N.H.	rural	35.4	54.7
Middletown, OH	semi-industrial	36.2	57.6
Pittsburgh, PA	industrial	42.8	61.3
Bethlehem, PA	industrial	55.1	75.3
Newark, NJ	industrial	72.4	102
Bayonne, NJ	industrial	127	155
East Chicago, IN	industrial	111	169
Cape Kennedy, FL 0.8 km from coast	marine	41.1	173
Brazos River, TX	industrial-marine	107	187
Cape Kennedy, FL 54m from coast, 18 m elevation	marine	61.3	263
Kure Beach, NC 240 m from the coast	marine	85.1	292
Cape Kennedy, FL 54m from coast, 9 m elevation	marine	70.8	330
Daytona Beach, FL	marine	209	592
Cape Kennedy, FL 54 m from coast, ground level	marine	191	884
Point Reyes, CA	marine	315	1004
Kure Beach, NC 24 m from the coast	marine	712	1070
Cape Kennedy, FL beach	marine	1057	

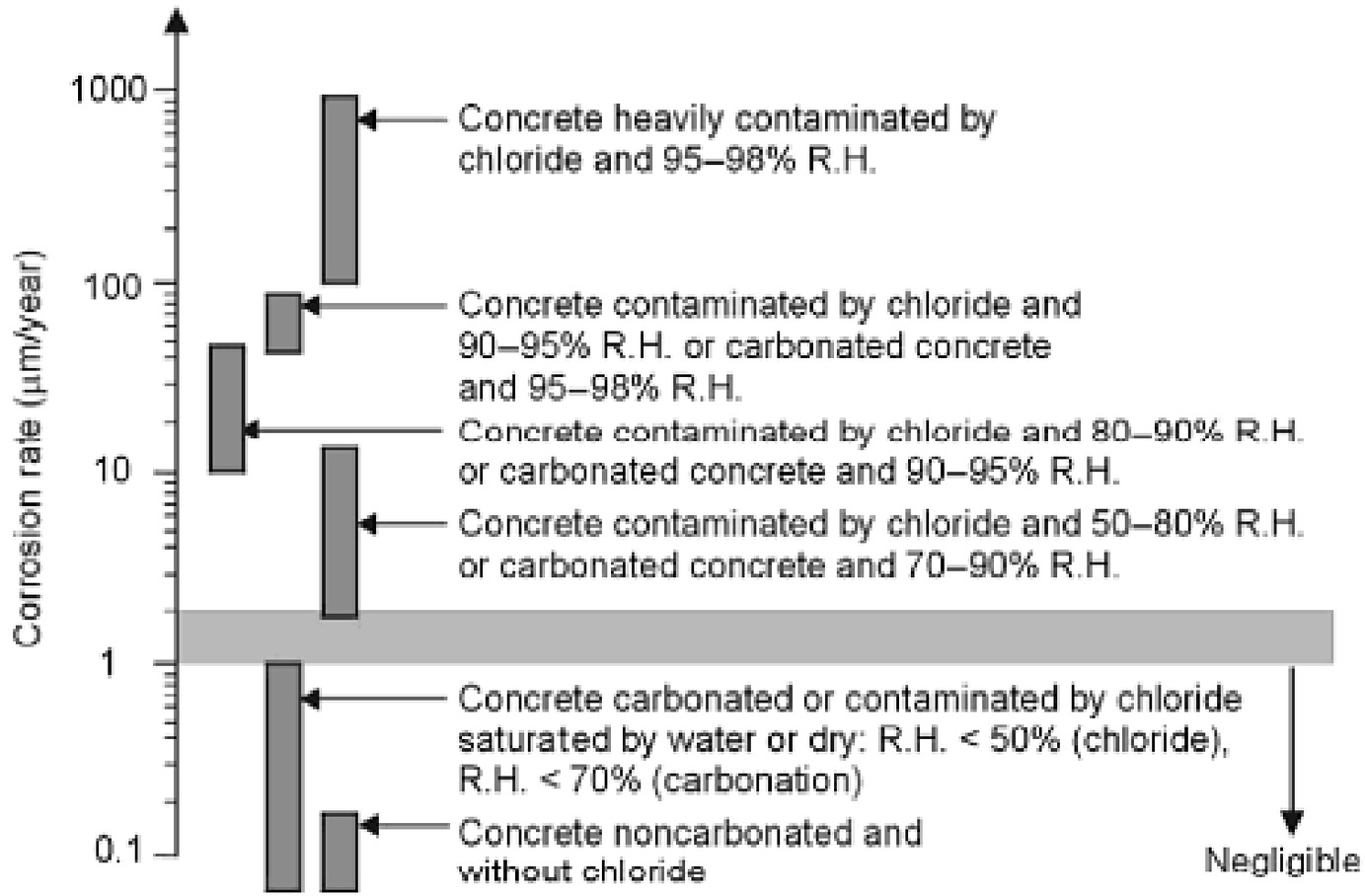

Figure 4.2 Schematic representation of corrosion rate of steel in different concretes and exposure conditions (after [9], modified).

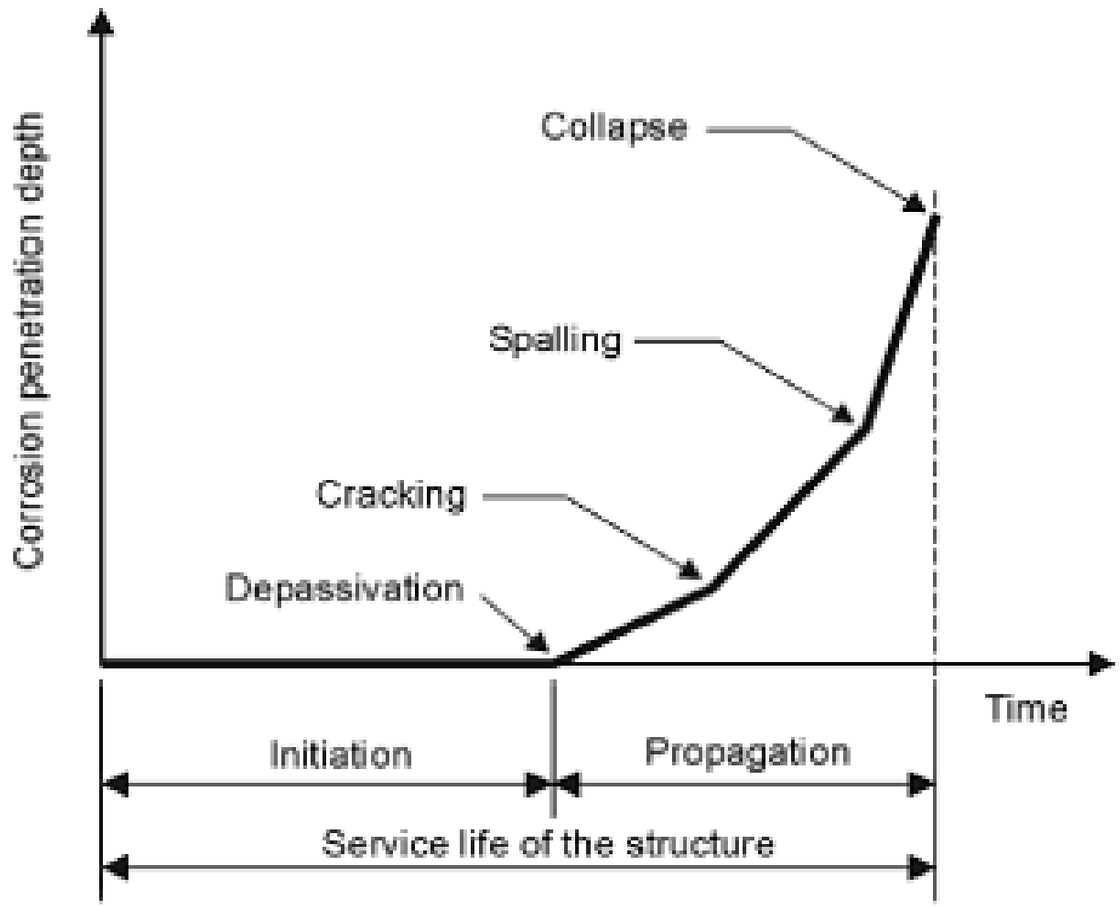

Figure 4.1 Initiation and propagation periods for corrosion in a reinforced concrete structure (from Tuutti's model) [7].

EXAMPLE 10.3. PIER FOOTING UNDER GRAVITY LOAD (concluded)

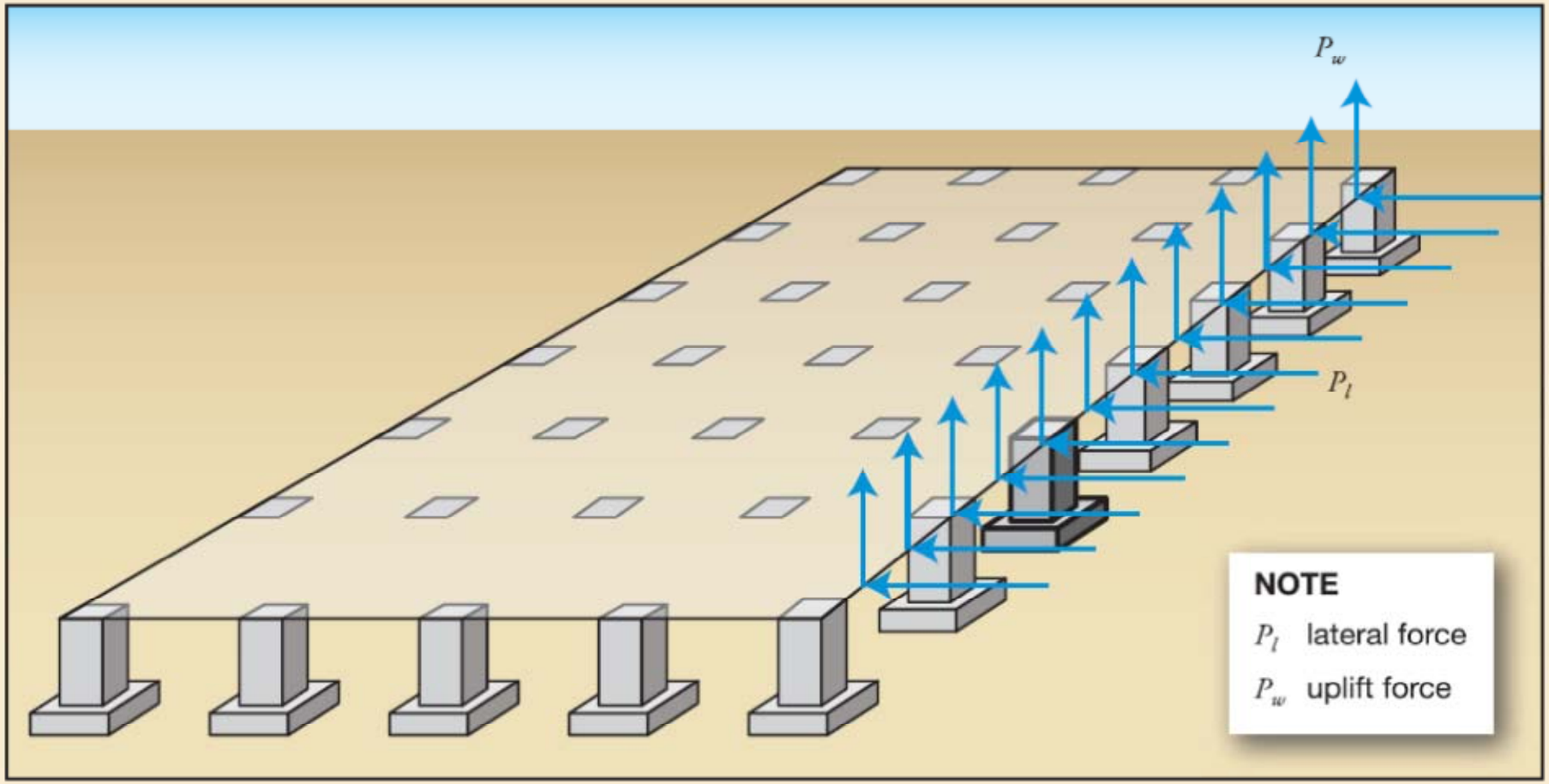

Illustration A. Site layout

Wind Borne Debris Hazards at The Colony

Wind Borne Debris Hazards at **The Colony**

Wind Borne Debris Hazards at **The Colony**

Wind Borne Debris Hazards at **The Colony**

Wind Borne Debris Hazards at **The Colony**

Wind Borne Debris Hazards at **The Colony**

Wind Borne Debris Hazards at **The Colony**

Flood Borne Debris Hazards at **The Colony**

Wind Borne Debris Hazards at **The Colony**

Wind Borne Debris Hazards at **The Colony**

Wind Borne Debris Hazards at **The Colony**

Wind Borne Debris Hazards at **The Colony**

Wind Borne Debris Hazards at **The Colony**

Wind Borne Debris Hazards at **The Colony**

Wind Borne Debris Hazards at **The Colony**

Wind Borne Debris Hazards at **The Colony**

Wind Borne Debris Hazards at **The Colony**

Wind Borne Debris Hazards at **The Colony**

Wind Borne Debris Hazards at **The Colony**